RNN vs LSTM vs GRU vs Transformers

Last Updated : 23 Jul, 2025

When working with data that comes in a sequence like sentences, speech or time-based information we need special models that can understand the order and connection between data points. There are four main types of models used for this Recurrent Neural Networks (RNNs), Long Short-Term Memory networks (LSTMs), Gated Recurrent Units (GRUs) and Transformers. Each model works in its own way and has different strengths and weaknesses. In this article, we will see difference between these models to find best one for our project.

Recurrent Neural Networks (RNNs)

RNNs are neural networks built specifically for handling sequential data. Unlike traditional feedforward networks they have loops that let them keep information from previous steps. This makes them useful for tasks where current outputs depend on earlier inputs like language modeling or predicting the next word.

The basic structure includes:

- **Input Layer:** Receives the sequence data**.**
- **Hidden Layer:** Processes input and maintains information from earlier time steps through recurrent connections.
- **Output Layer**: Generates predictions based on the current hidden state.

RNNs perform well on short sequences but struggle to capture long-

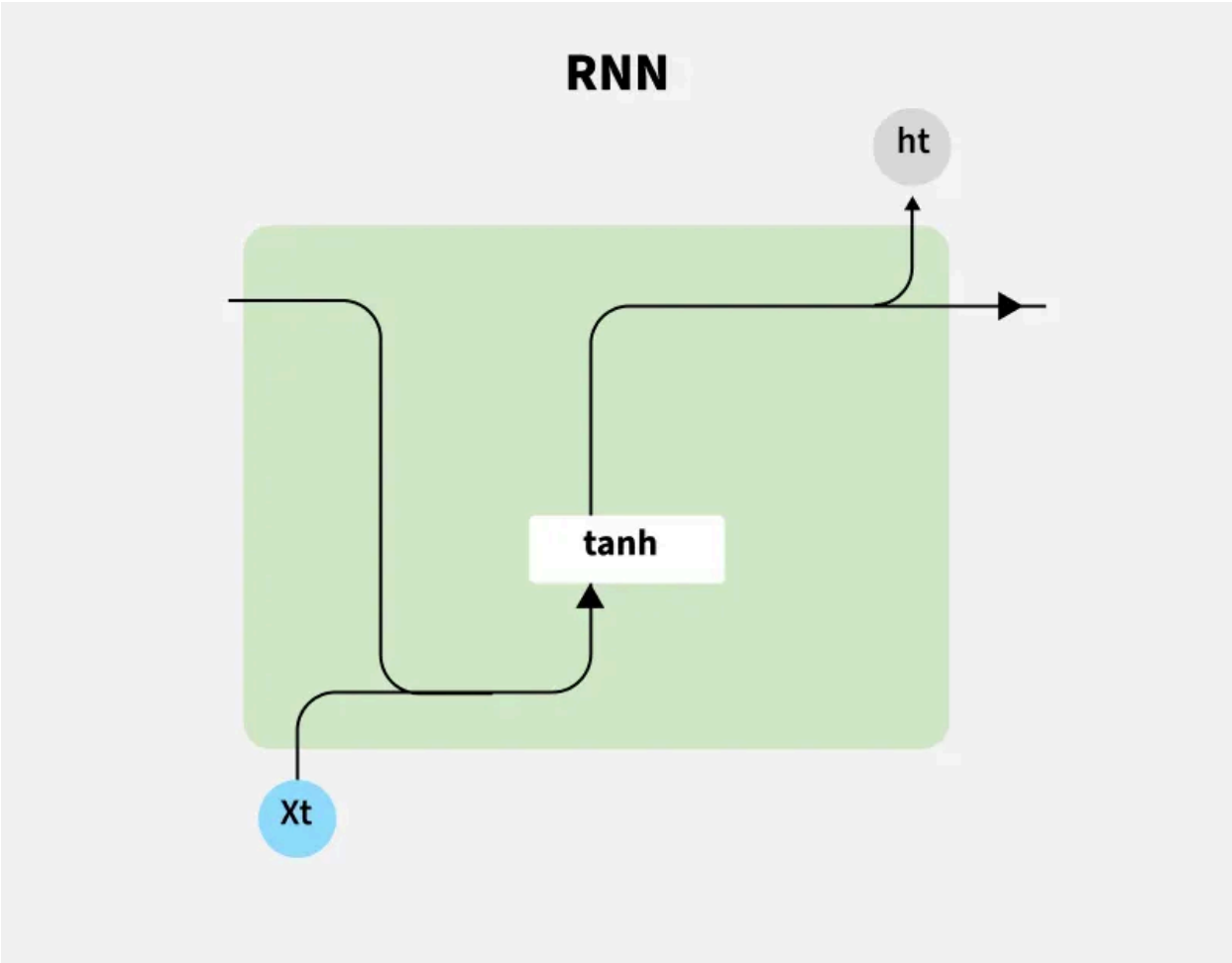

Recurrent Neural Network

Limitations of RNNs

The main limitation of RNNs is the vanishing gradient problem. As sequences grow longer they struggle to remember information from earlier steps. This makes them less effective for tasks that need understanding of long-term dependencies like machine translation or speech recognition. To resolve these challenges more advanced models such as LSTM networks were developed.

Long Short-Term Memory (LSTM) Networks

LSTM networks are an improved version of RNNs designed to solve the vanishing gradient problem. They use memory cells that keep information over longer periods

1. **Input Gate**: Decides what new information to store.
2. **Forget Gate**: Chooses what information to remove.
3. **Output Gate**: Decides what information to pass on.

This gating system allows LSTMs to remember and forget information selectively helps in making them effective at learning long-term dependencies.

They work well in tasks like sentiment analysis, speech recognition and language translation where understanding context over long sequences is important.

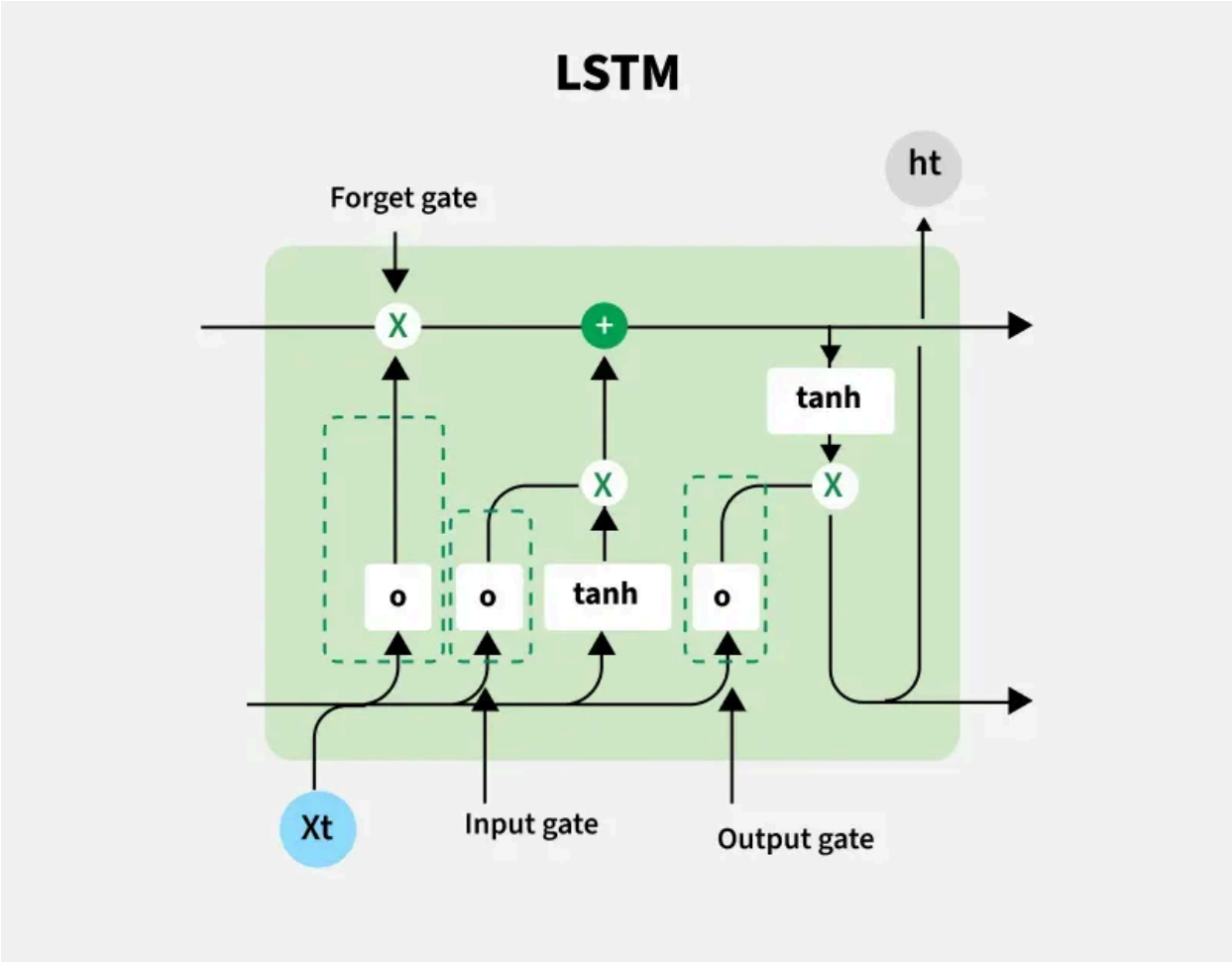

Long Short-Term Memory (LSTM) Networks

Limitations of LSTMs

they still face challenges with very long-range dependencies. Their sequential nature also limits the ability to process data in parallel which slows down training.

Gated Recurrent Units (GRU)

GRUs are a simplified version of LSTMs, they combine the input and forget gates into a single update gate helps in reducing the number of parameters and making the model less computationally demanding. Here's how it works:

- **Update Gate**: This gate decides how much of the information from the past should be kept for future steps. It helps the GRU remember important details.
- **Reset Gate**: This gate decides how much past information should be forgotten. If something is no longer relevant it forget that part.

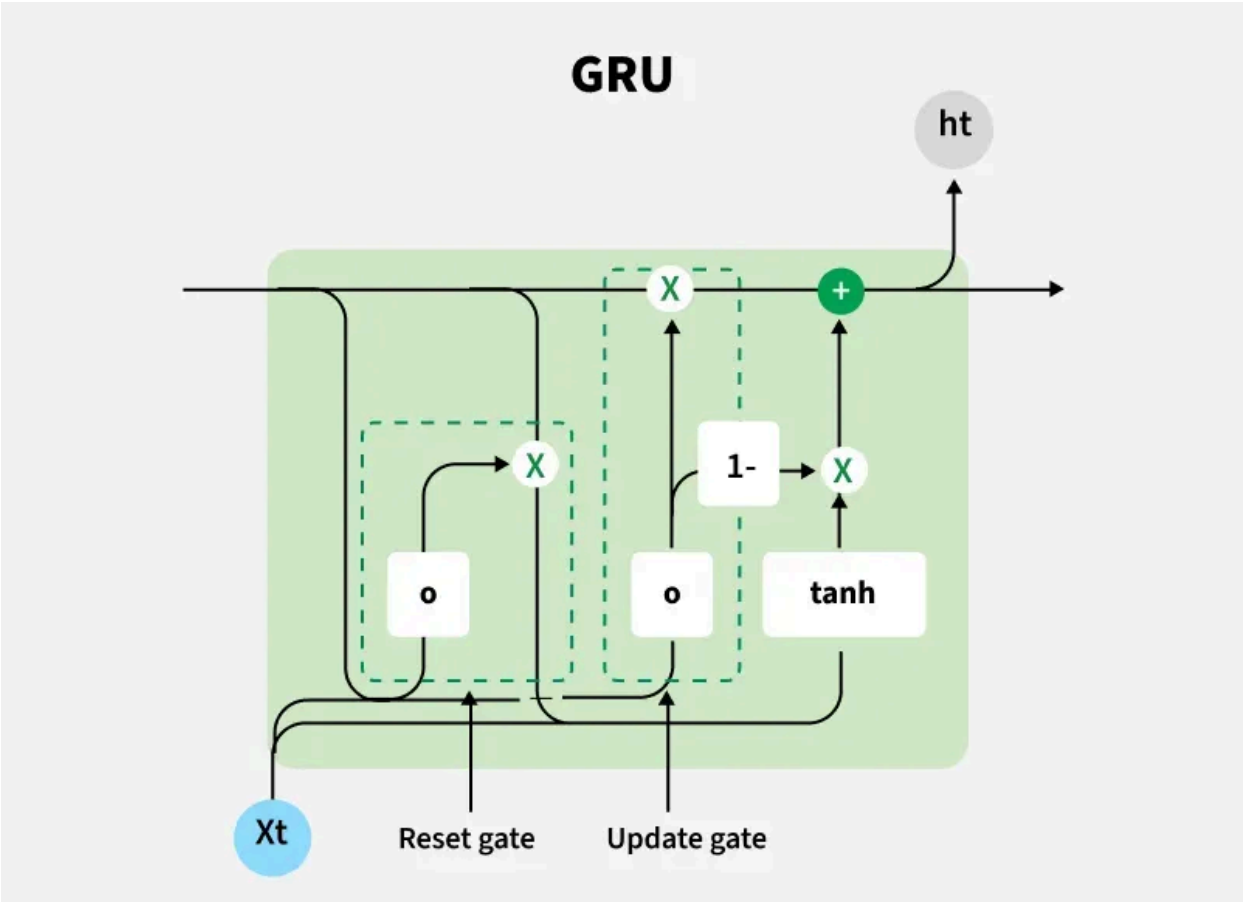

GRUs offer a good balance between performance and efficiency. They match or outperform LSTMs in some tasks while being faster and using fewer resources. They are ideal when computational efficiency matters but accuracy cannot be compromised.

Limitations of GRUs

Although GRUs are simpler and faster than LSTMs but they still rely on sequential processing which limits parallelization and slows training on long sequences. Like LSTMs, they can struggle with very long-range dependencies in some cases.

Transformers

Transformers process sequences differently by using a self-attention mechanism that analyzes the entire sequence at once. This allows them to handle long sequences efficiently and capture long-range dependencies without relying on sequential steps.

Their key advantage is the ability to process data in parallel helps in making them highly scalable and faster to train on large datasets. Some popular transformer models include GPT, BERT and T5 which helps in tasks like text generation, language understanding and machine translation.

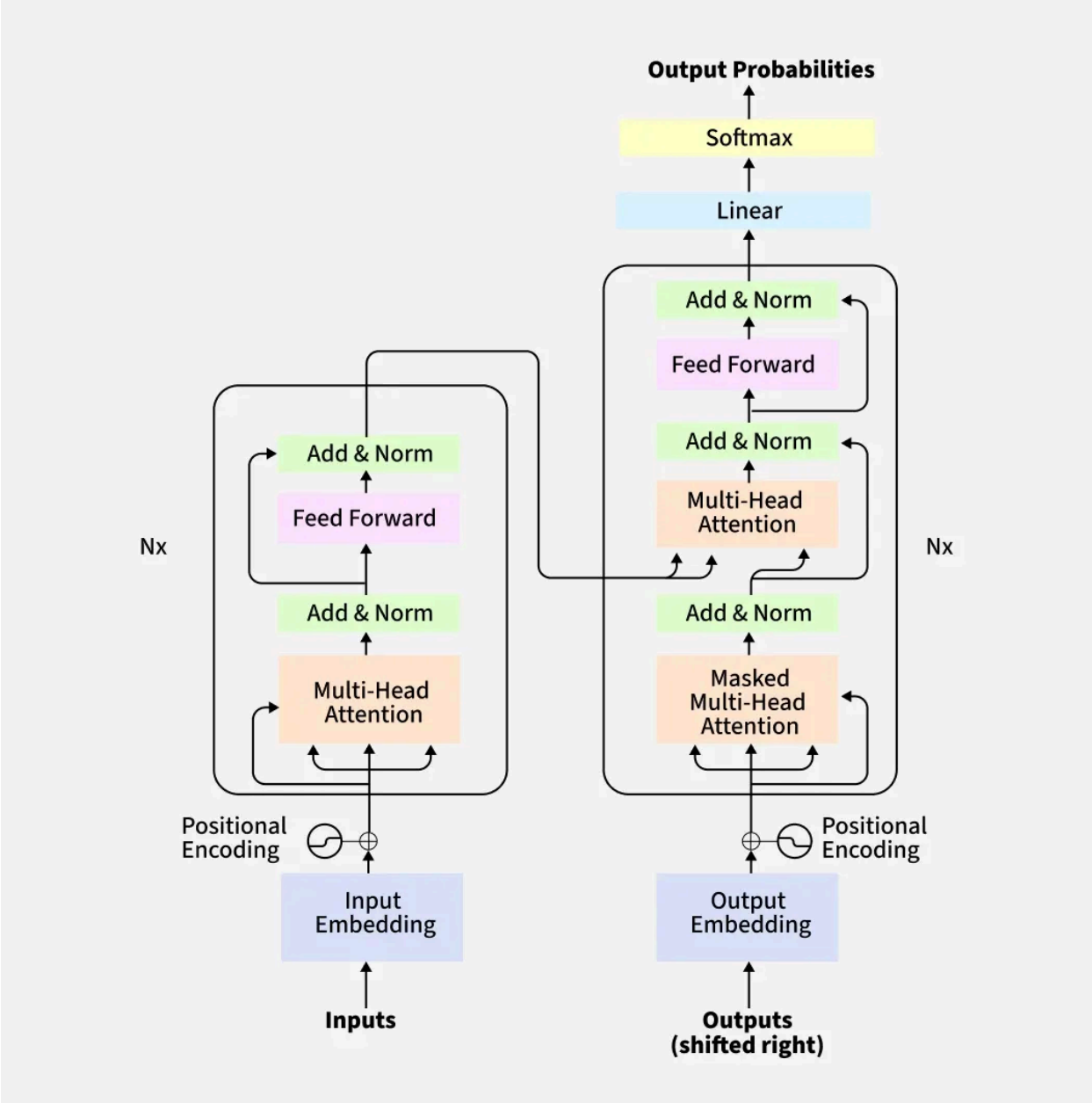

Transformers

Limitations of Transformers

Transformers require large amounts of computational power and memory which makes them expensive to train and deploy. Their complex architecture and many parameters also demand high-quality data and resources. Also for very long sequences, the self-attention mechanism can become computationally heavy.

While LSTMs and GRUs improved on basic RNNs, they still had major drawbacks. Their step-by-step sequential processing made it difficult to handle very long sequences and complex dependencies efficiently. This sequential nature also limited parallelization which causes slow and costly training.

Transformers solved these problems by using self-attention which processes the entire sequence at once. This allows transformers to capture long-range dependencies more effectively and train much faster. Unlike RNN-based models, transformers do not rely on sequential steps helps in making them highly scalable and suitable for larger datasets and more complex tasks.

RNN vs LSTM vs GRU vs Transformers

Parameter	RNN (Recurrent Neural Network)	LSTM (Long Short-Term Memory)	GRU (Gated Recurrent Unit)	Transformer
rchitecture	Simple structure with loops.	Memory cells with input, forget and output gates.	Combines input and forget gates into update gate; fewer parameters	Utilizes an attention-based mechanism without recurrence.
Handling Long Sequences	Struggles to maintain long-term dependencies due to	Excels in capturing long-term dependencies	Better than RNNs but slightly less effective than LSTMs for	Effectively manages lon sequences using self-attention

Parameter	RNN (Recurrent Neural Network)	LSTM (Long Short-Term Memory)	GRU (Gated Recurrent Unit)	Transformer
Training Time	Fast but less accurate on complex data	Slower due to multiple gates and memory operations	Faster than LSTMs but slower than RNNs.	Requires heav computatior but allows parallel training
Memory Usage	Low memory requirements.	Higher memory consumption due to its complex architecture.	Lower memory usage compared to LSTMs but higher than RNNs.	High memor usage due to multi-head attention and feed-forward layers.
Parameter Count	Fewer parameters overall.	More parameters than RNNs because of gates and memory cells.	Fewer parameters than LSTMs due to its simplified gating structure.	A large number of parameters i multi-head attention layers.
Ease of Training	Prone to vanishing gradients making it harder to	Easier to train for long sequences due to effective	Simpler than LSTMs and easier to train than RNNs.	Requires significant computationa power and

Parameter	RNN (Recurrent Neural Network)	LSTM (Long Short-Term Memory)	GRU (Gated Recurrent Unit)	Transformer
Use Cases	Suitable for simple sequence modeling like stock prices.	Ideal for time-series forecasting, text generation and tasks requiring long-term dependencies.	Similar applications as LSTM but preferred when computational efficiency is important.	Best suited fo NLP tasks lik translation, summarizatio computer vision and speech processing.
Parallelism	Limited due to sequential computation constraints.	Same limitations as RNNs; sequential processing restricts parallelism.	Same limitations as RNNs; sequential processing restricts parallelism.	High parallelism enabled by th attention mechanism and non-sequential design.
Performance on Long Sequences	Poor performance on long sequences.	Good performance on long sequences.	Moderate to good performance on long sequences.	Excellent performance on long sequences.

As research continues, we'll see even better tools to handle sequential

Suggested Quiz 6 Questions

What is the primary benefit of fine-tuning pre-trained language models?

A It allows models to be trained from scratch faster

B It leverages previously learned knowledge to adapt to specific tasks

C It increases the model's complexity

D It reduces the need for large datasets

Login to View Explanation 1/6 < Previous Next >

Comment S sahilg... + Follow 2

Article Tags : Deep Learning Neural Network

Explore

Deep Learning Basics

Neural Networks Basics

Deep Learning Models

Deep Learning Frameworks

Model Evaluation

Deep Learning Projects

GeeksforGeeks
Sanchhaya Education Private Limited

Corporate & Communications Address:
A-143, 7th Floor, Sovereign Corporate Tower, Sector- 136, Noida, Uttar Pradesh (201305)

Registered Address:
K 061, Tower K, Gulshan Vivante Apartment, Sector 137, Noida, Gautam Buddh Nagar, Uttar Pradesh, 201305

GET IT ON Google Play
Download on the App Store

Company
About Us
Legal
Privacy Policy
Contact Us

Explore
POTD
Job-A-Thon
Blogs
Nation Skill Up

Tutorials

Programming Languages
DSA
Web Technology
AI, ML & Data Science
DevOps
Software and Tools

Courses

ML and Data Science
DSA and Placements
Web Development
Programming Languages
DevOps & Cloud

Videos

DSA
Python
Java
C++
Web Development
Data Science
CS Subjects

Preparation Corner

Interview Corner
Aptitude
Puzzles
GfG 160
System Design

@GeeksforGeeks, Sanchhaya Education Private Limited, All rights reserved

Do Not Sell or Share My Personal Information